STRAIGHT LOAD TWO HORSE

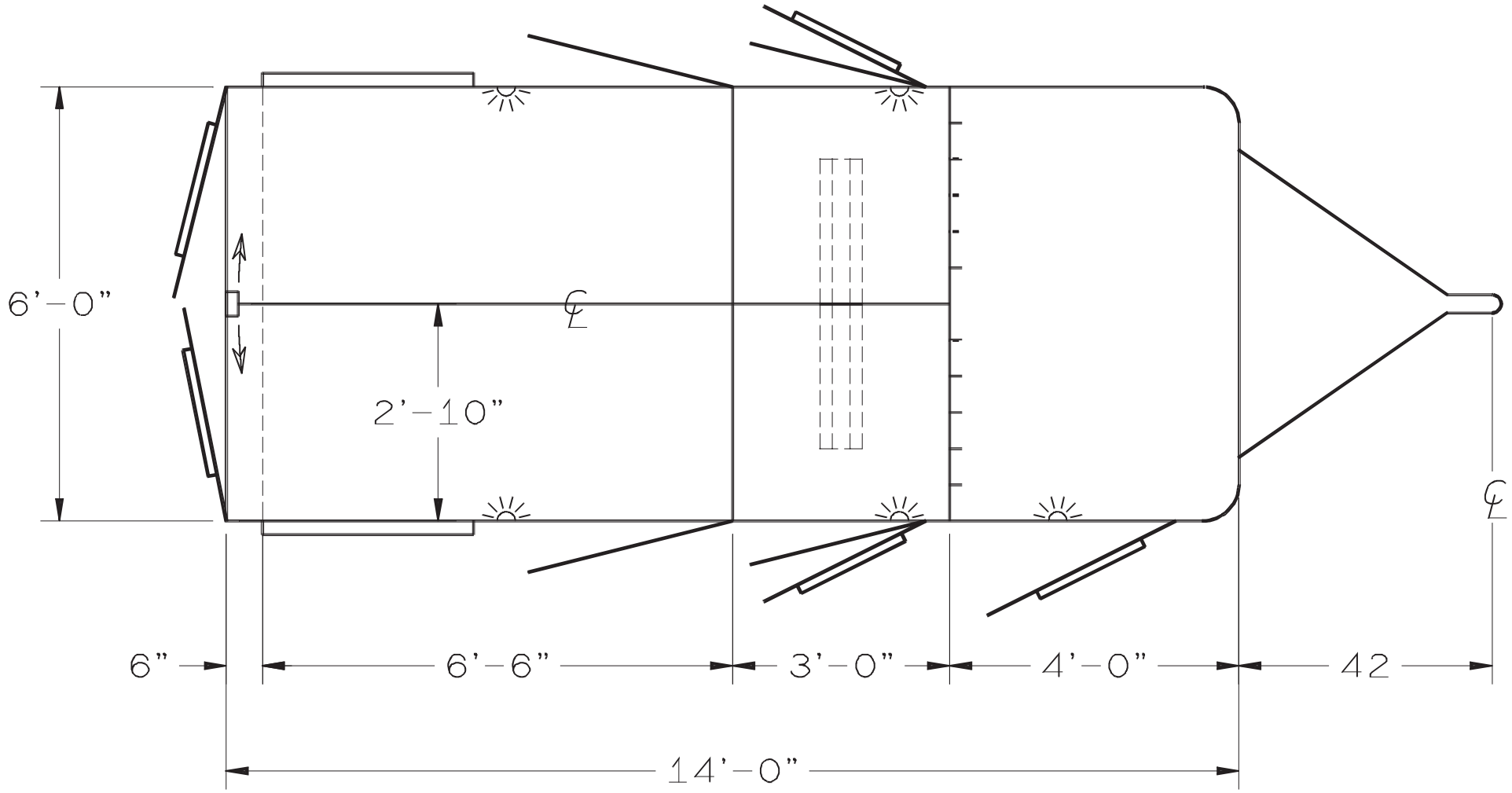

14 x 6 Flat Nose Bumper Pull